Yale®

Electric Chain Hoist

Model CPV/F

Capacity 250 - 2.000 kg

Translated Operating- and Maintenance Manual

COLUMBUS McKINNON Industrial Products GmbH
P. O. Box 11 01 53 • D-42301 Wuppertal, Germany
Yale-Allee 30 • D-42329 Wuppertal, Germany
+49 (0) 202/6 93 59-0 • Fax + 49 (0) 202 / 6 93 59-127

Ident.-No.: 09901076/04.2014

COLUMBUS McKINNON

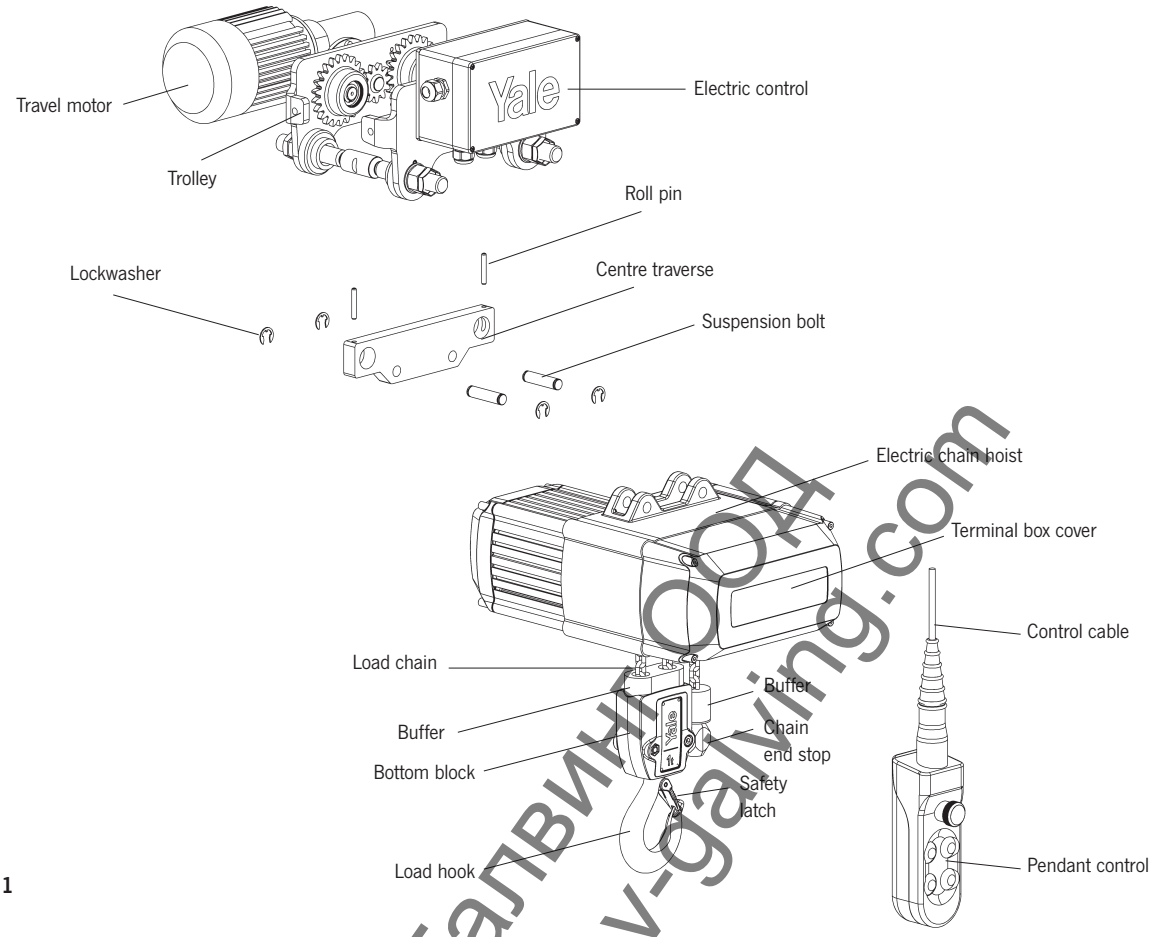

Fig. 1

Technical data electric chain hoist **Technical data electric trolley**

Model	Capacity [kg]	Number of chain falls	Motor rating* ED [%]	Motor* [kW]	Lifting speed(s)** [m/min]	FEM group	Beam widths [mm]	Curve radius min [m]	Travel speed(s)*** [m/min]	Motor [kW]	Motor rating* ED [%]
CPV 2-8 CPVF 2-8	250	1	50 17/33	0,37 0,09/0,37	8 2/8	1 A_m	58 - 180 or 180 - 300	0,9	18 4,5/18	0,18 0,06/0,18	40 20/40
CPV 2-20 CPVF 2-20	250	1	50 17/33	0,75 0,18/0,75	20 5/20	1 A_m	58 - 180 or 180 - 300	0,9	18 4,5/18	0,18 0,06/0,18	40 20/40
CPV 5-4 CPVF 5-4	500	2	50 17/33	0,37 0,09/0,37	4 1/4	1 A_m	58 - 180 or 180 - 300	0,9	18 4,5/18	0,18 0,06/0,18	40 20/40
CPV 5-8 CPVF 5 -8	500	1	50 17/33	0,75 0,18/0,75	8 2/8	1 A_m	58 - 180 or 180 - 300	0,9	18 4,5/18	0,18 0,06/0,18	40 20/40
CPV 5-20 CPVF 5 -20	500	1	50 17/33	1,5 0,37/1,5	20 5/20	1 A_m	58 - 180 or 180 - 300	1,15	18 4,5/18	0,18 0,06/0,18	40 20/40
CPV 10-4 CPVF 10 -4	1.000	2	50 17/33	0,75 0,18/0,75	4 1/4	1 A_m	58 - 180 or 180 - 300	0,9	18 4,5/18	0,18 0,06/0,18	40 20/40
CPV 10-8 CPVF 10 -8	1.000	1	50 17/33	1,5 0,37/1,5	8 2/8	1 A_m	58 - 180 or 180 - 300	1,15	18 4,5/18	0,18 0,06/0,18	40 20/40
CPV 20-4 CPVF 20-4	2.000	2	50 17/33	1,5 0,37/1,5	4 1/4	1 A_m	58 - 180 or 180 - 300	1,15	18 4,5/18	0,18 0,06/0,18	40 20/40

*230 V/3 Ph/50 Hz, 400 V/3 Ph/50 Hz, 460 V/3 Ph/60 Hz
**Speed(s) CPV 10-8 at 230 V, 1 Ph, 50 Hz = 4 m/min Speed(s) CPV 20-4 at 230 V, 1 Ph, 50 Hz = 2 m/min
***Optionally available with 11 m/min.

TABLE OF CONTENTS PAGE

1. GENERAL INFORMATION

Attention: All users must read these operating instructions carefully prior to the initial operation. These instructions are intended to acquaint the user with the hoist/trolley and enable him to use it to the full extent of its intended capabilities.

The operating instructions contain important information on how to handle the hoist/trolley in a safe, correct and economic way. Acting in accordance with these instructions helps to avoid dangers, reduce repair costs and downtime and to increase the reliability and lifetime of the hoist/trolley.

Anyone involved in doing any of the following work with the hoist/trolley must read the operating instructions and act accordingly:

- Operation, including preparation, trouble shooting and cleaning
- Maintenance, inspection, repair
- Transport

Apart from the operating instructions and the accident prevention act valid for the respective country and area where the hoist/trolley is used, also the commonly accepted regulations for safe and professional work must be adhered to.

The user is responsible for the proper and professional instruction of the operating personnel.

Every unit leaving the factory is furnished with a test certificate that shows the serial number of the hoist/trolley. This certificate has to be filed together with the inspection manual.

The continuous sound level at the place of work is equal to < 70 dB. The measures were taken at a distance of 1 m from the hoist at 9 positions in accordance with DIN 45635, precision class 2.

2. CORRECT OPERATION

Maximum capacity

The Yale electric chain hoist series CPV/F has been designed to lift and lower loads up to the rated capacity. The lifting capacity indicated on the hoist/trolley is the maximum safe working load which must not be exceeded.

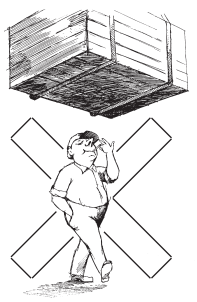

Fig. 2

Danger zones

- Do not allow personnel to pass under a suspended load (see Fig. 2).
- After lifting or tensioning, a load must not be left unattended for a longer period of time.
- Start moving the load only after it has been attached correctly and all personnel are clear of the danger zone.

Attaching the hoist/trolley

The operator must ensure that the hoist/trolley is attached in a manner that does not expose himself or other personnel to danger by the hoist, trolley, chain(s) or the load.

Temperature range

The units can be operated in ambient temperatures between -10° C and +40° C. Consult the manufacturer in case of extreme working conditions.

Attention: At ambient temperatures below 0° C check the brake is not frozen.

Theoretical service life

The electric chain hoist is classified to group $1A_m$ according to FEM 9.511. Basic principles for the calculation of the theoretical remaining service life are given in BGV D8. When the theoretical remaining service life has been reached, the electric chain hoist should be subjected to a general overhaul (also refer to para 8. Maintenance).

Regulations

The accident prevention act and/or safety regulations of the respective country for using manual and electric hoists must be strictly adhered to. In Germany these are BGV D6, BGV D8, BGR 500 and VDE 0113-32 / EN 60204-32 : 1999.

Maintenance/Repair

In order to ensure correct operation, not only the operating instructions, but also the conditions for inspection and maintenance must be complied with. If defects are found or abnormal noise is to be heard stop using the hoist / trolley immediately.

Attention: Before starting work on electrical components the power supply is to be cut off.

3. INCORRECT OPERATION

- Do not exceed the rated capacity of the hoist/trolley.
- Do not lift stuck or jammed loads.
- Excessive inching operation by short and frequent actuation of the control switch should be avoided.
- Do not use the hoist/trolley for the transportation of people (Fig. 3).
- Welding on hook and load chain is strictly forbidden. The load chain must never be used as a ground connection during welding (Fig. 4).

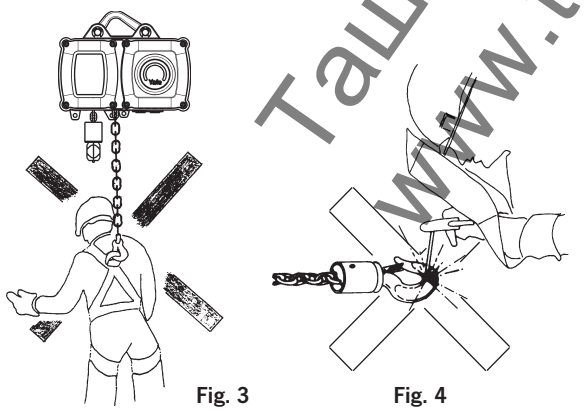

Fig. 3 Fig. 4

- Side pull, i.e. lateral load on either housing or bottom block (Fig. 5) is not permitted.
  Lift only when the load chain forms a straight line between suspension bracket and hook.
- The load chain must not be used for lashing purposes (sling chain) (Fig. 6).

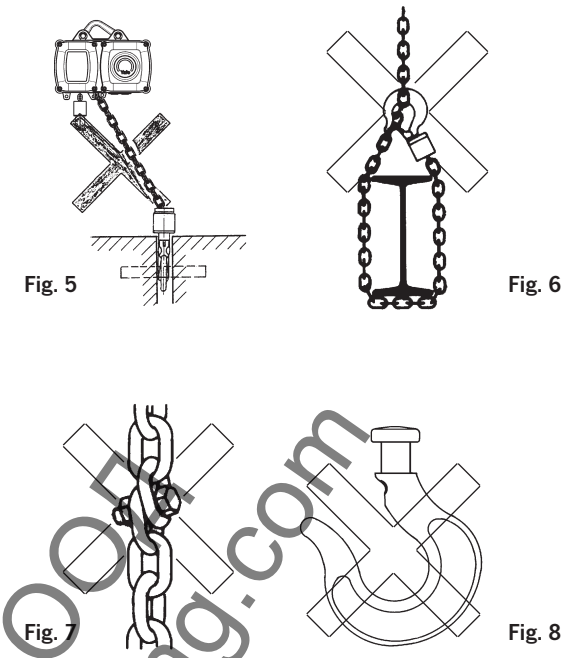

Fig. 5 Fig. 6

Fig. 7 Fig. 8

- Do not knot or shorten the load chain by using bolts, screws, screwdrivers or other devices (Fig. 7). Do not repair chains installed in the hoist.
- Do not remove the safety latch from the load hook (Fig. 8).
- Do not use the chain end stop as an operational limit device (see Fig. 1 - chain end stop).
- Do not throw the hoist or trolley down. Always place it properly on the ground.
- The unit must not be operated in potentially explosive atmospheres.
- The longitudinal downward slope of the carriageway must not exceed 0,3 %.
- The adjustment of the trolley width must not be extended in order to e.g. obtain a smaller radius curvature.
- Any modifications of the hoist or trolley are prohibited.
- Load can not fall into the loose chain - risk of chain break!
- Never attach the load to the tip of the hook (Fig. 14). The load must always be seated in the saddle of the hook. This also applies to the suspension hook.
- Turning of loads under normal operating conditions is not allowed, as the bottom blocks of the hoists are not designed for this purpose. If turning of loads is required as standard, the bottom blocks have to be provided with swivel hooks supported by axial bearings. In case of queries consult the manufacturer. When turning a lifted load the load chain must not rotate in any circumstances.
- Never attach more than one load lifting attachment to the load hook of the hoist or trolley.

4. ASSEMBLY

4.1 INSPECTION BEFORE ASSEMBLY

- Check for transport damage
- Check for completeness
- Check that the capacity indication on hoist and bottom block match.

4.2 ELECTRIC CHAIN HOIST WITH SUSPENSION BRACKET

(Standard version)

The standard version of the Yale electric chain hoist is provided with a suspension bracket. The bracket is connected with the housing of the chain hoist by means of two bolts. Make sure that the load hook – irrespective of the reeving – is always positioned vertically under the suspension bracket (see Fig. 9).

On single strand units, the suspension bracket is installed with the long bracket side to the right, on dual strand units with the long bracket side to the left (see Fig. 9).

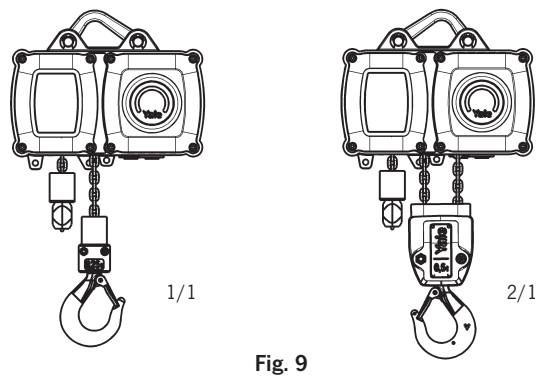

Fig. 9

Attention: Do not forget to fit the lock washers after installation of the suspension bracket.
The load bearing structure must be calculated to safely accept the entire driving forces.

4.3 ELECTRIC CHAIN HOIST WITH TROLLEY

The units are delivered pre-assembled and are built to fit beam range A or B which is given on the name plate (Tab. 1). Prior to installation ensure that the flange width is within the limits indicated.

Beam range	Flange width [mm] min.	Flange width [mm] max.	Flange thickness [mm] max.
A	58	180	27
B	180	300	27

Tab. 1

Assembly of the trolley (see Fig. 10)

1. Unscrew the locking nuts (item 9) and hex. nuts (item 2) from the crossbars (item 1) and remove both side plates (item 6) from the trolley.

2. Measure the flange width of the beam (see Fig. 10 - measure b).

3. Adjust measure B between the shoulders of the round nuts (item 5) on the threaded crossbars (item 1). Ensure that the 4 bores in the round nuts face towards the outside. Adjust the measure B to equal measure b plus 4 mm. Measure A must be 2 mm on either side and the suspension traverse (item 4) must be centred between the round nuts.

4. Replace one side plate (item 6):
Replace one side plate ensuring that the roll pins (item 8) engage into one of the bores in the round nuts. To achieve this it may be necessary to rotate the round nuts slightly.

5. Replace the washers (item 3) and tighten the hex. nuts (item 2). Screw on the locknuts (item 9) fingertight and tighten a further ¼ to ½ turn.

Attention: The locknuts must always be fitted.

6. Loosely replace the second side plate (item 6) on the crossbars (item 1). The washers (item 3), hex. nuts (item 2) and locknuts (item 9) can be fitted loosely.

7. Raise the complete pre-assembled trolley to the carrying beam.

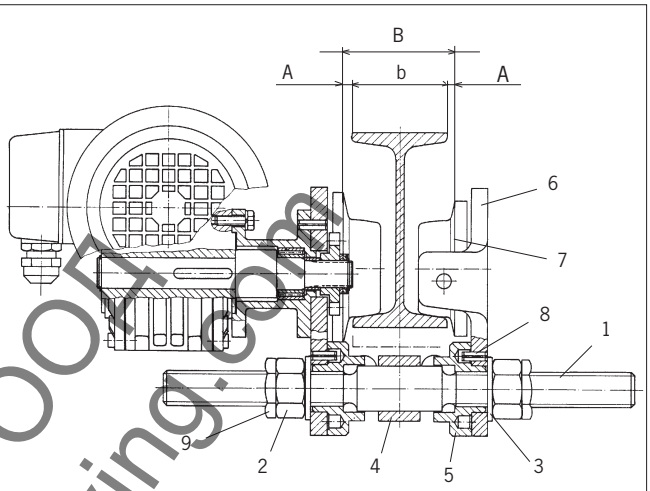

No.	Description	No.	Description
1	Crossbar	6	Side plate
2	Hex. nut	7	Trolley wheel
3	Washer	8	Roll pin
4	Centre traverse	9	Locknut
5	Round nut	10	Roll pins

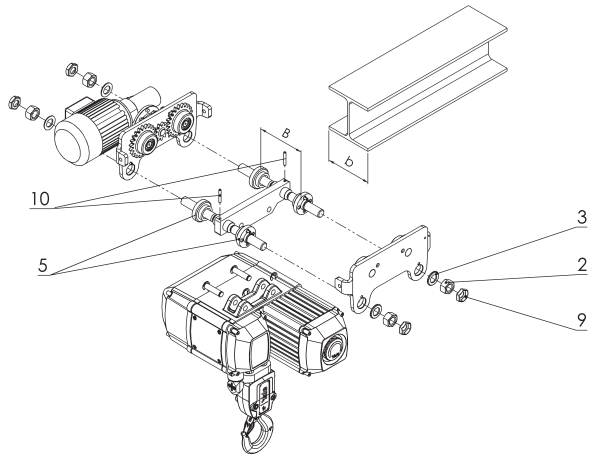

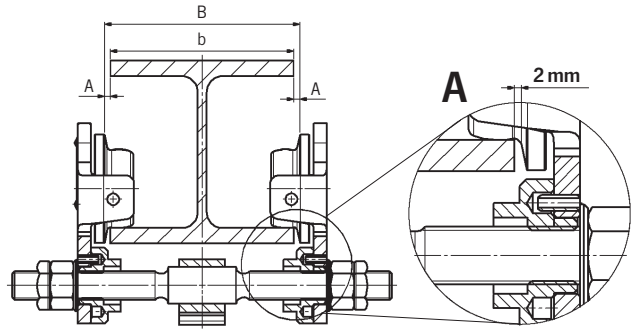

Fig. 10

8. Engage the second side plate (item 6) ensuring that the roll pins (item 8) engage into one of the bores in the round nuts (item 5). To achieve this it may be necessary to rotate the round nuts slightly.

9. Tighten the hex. nuts (item 2) on the second side plate. Tighten the locknuts (item 9) fingertight and then a further ¼ to ½ turn.

Attention: The locknuts must always be fitted.

10. By traversing the trolley check the following:

- that a clearance of 2 mm is maintained on each side between the trolley wheel flanges and the beam outer edge.
- that the suspension traverse is centred below the beam.
- that all 4 locknuts (item 9) are fitted.
- that the side plates are parallel.
- that all wheels roll freely and make good contact with the flange of the beam.
- that there are no obstacles on the driving surface.

Assembly of the hand chain

(Model VTG with hand chain drive only)

To fit the hand chain position the slot on the outer edge of the hand chain wheel below the chain guide. Place any one link of the endless hand chain vertically into the slot and turn the hand chain wheel until the link has passed the chain guides on both sides.

Attention: Do not twist the hand chain when fitting!

Geared trolleys are moved by pulling the hand chain.

Shortening or extending the hand chain

(Model CPV/F with hand chain drive only)

The length of the hand chain should be adjusted so that the distance to the floor is 500 - 1000 mm.

1. Determine the open link of the hand chain and open up by bending.

2. Shorten or extend the hand chain as required.

Attention: The number of removed or added chain links must always be even.

3. Close the open connecting link by bending.

4.4 ELECTRICAL CONNECTION

Attention!

Work at electrical installations may be carried out by electrical experts only. The local regulations have to be strictly observed, e. g. EN 60204-32 / VDE 0113.

Preparation

- Before beginning work on electrical components the mains current switch must be switched OFF and secured against unintentionally being switched back on.
- Before connecting the chain hoist ensure that the electrical data on the nameplate match the local supply specifications.
- The length of the pendant control cable is determined by working conditions. Attach the tension relief wire in a manner that the pendant control cable hangs load-free.
- Wiring diagrams are included with the hoist.

Mains supply connection 3 phases

- The mains supply cable must be an insulated cable with 4 flexible leads. The ground (earth) lead must be longer than the live leads. The cross-section should be min. 1,5 mm², the cable length should be max. 50 m. For the fusing of the various models see tables on page 7. Cable ends have to be provided with end sleeves.

Mains supply connection 1 phase

- The mains supply cable must be an insulated cable with 3 flexible leads. The ground (earth) lead must be longer than the live leads. The cross-section should be min. 1,5 mm², the cable length should be max. 50 m. For the fusing of the various models see tables on page 7. Cable ends have to be provided with end sleeves.

Connecting to the power supply

- The mains supply cable must be connected to the electric chain hoist before it is connected to the mains supply.

Mains supply connection 3 phases

- On chain hoists <u>with</u> an electric trolley (CPV/F-VTE/F), the three phases of the mains supply are to be connected to the terminal strip within the control box on the trolley. The ground/earth wire is then to be connected to a special protective terminal inside the control box of the hoist.
- On chain hoists <u>without</u> electric trolley, the mains supply cable is connected to the circuit board located behind the housing cover (Fig. 18, Pos. 3). The U-type cable shoe of the ground/earth wire must be screwed to the core lamination (do not forget the serrated washer).
- Check the motor's direction of rotation.
- The wiring diagram included has been drawn for a normal, clockwise rotating installation. Should the user's mains supply not fulfil these requirements, e. g. the hoist lowers when lift is selected (or vice versa), switch the unit OFF immediately and exchange two of the three phase connections in the terminal box.
  Under no circumstances may the wiring in the pendant control be tampered with.

Mains supply connection 1 phase

- On chain hoists <u>with</u> an electric trolley (CPV/F-VTE/F), the N-conductor, phase and protective earth conductor are connected to the appropriate terminal strips within the control box on the trolley.
- On chain hoists <u>without</u> electric trolley, the mains supply cable is connected to the terminal strip of the plate for hoist control (Fig. 18, item 3).

Attention! The settings of the time relay (ZR) must not be changed!

Attention! Open the housing only 3 minutes after disconnecting the unit from the mains supply. There is the danger of electrical shock by not yet discharged capacitors.

- After replacing the terminal box cover, connect the other end of the supply cable to the disengaged mains switch and power supply system respectively.

Motor data CPV 230 V - 1 Ph - 50 Hz

Model	P [kW]	n [1/min]	ED [%]	Capacitors	In [A]	cos φ	Number of circuits [c/h]	Protection degree	Operation mode	Fuse* [A]
CPV 2-8, CPV 5-4	0,5	2730	25	CA = 60µF/CB = 16µF	3,3	0,99	150	IP 55	S3	16
CPV 5-8, CPV 10-4	1,0	2800	25	CA = 100µF/CB = 30µF	6,0	0,99	150	IP 55	S3	16
CPV 10-4, CPV 20-2	0,75	1400	25	CA = 60µF/CB = 30µF	5,0	0,98	150	IP 55	S3	16

Motor data CPV 230/400 V - 3 Ph - 50 Hz

Model	P [kW]	n [1/min]	ED [%]	Kind of connection	In [A]	cos φ	Number of circuits [c/h]	Protection degree	Operation mode	Fuse* [A]
CPV 2-8, CPV 5-4	0,37	2890	50	delta/Y	1,38/0,8	0,99	300	IP 55	S3	6
CPV 2-20, CPV 5-8, CPV 10-4	0,75	2890	50	delta/Y	2,8/1,6	0,99	300	IP 55	S3	10
CPV 5-20, CPV 10-8, CPV 20-4	1,5	2860	50	delta/Y	5,5/3,2	0,98	300	IP 55	S3	16

Motor data CPVF 400 V - 3 Ph - 50 Hz

Model	P [kW]	n [1/min]	ED [%]	Kind of connection	In [A]	cos φ	Number of circuits [c/h]	Protection degree	Operation mode	Fuse* [A]
CPVF 2-8, CPVF 5-4	0,09/0,37	640/2850	17/33	Y/Y	0,55/1,0	0,59/0,78	200/100	IP 55	S3	6
CPVF 2-20, CPVF 5-8, CPVF 10-4	0,18/0,75	620/2800	17/33	Y/Y	0,95/2,0	0,65/0,82	200/100	IP 55	S3	10
CPVF 5-20, CPVF 10-8, CPVF 20-4	0,37/1,5	640/2780	17/33	Y/Y	1,60/3,3	0,64/0,89	200/100	IP 55	S3	16

Motor data CPV 460 V - 3 Ph - 60 Hz

Model	P [kW]	n [1/min]	ED [%]	Kind of connection	In [A]	cos φ	Number of circuits [c/h]	Protection degree	Operation mode	Fuse* [A]
CPV 2-8, CPV 5-4	0,44	3480	50	Y	0,8	0,85	300	IP 55	S3	6
CPV 2-20, CPV 5-8, CPV 10-4	0,9	3480	50	Y	1,6	0,86	300	IP 55	S3	10
CPV 5-20, CPV 10-8, CPV 20-4	1,8	3450	50	Y	3,2	0,86	300	IP 55	S3	16

Motor data CPVF 460 V - 3 Ph - 60 Hz

Model	P [kW]	n [1/min]	ED [%]	Kind of connection	In [A]	cos φ	Number of circuits [c/h]	Protection degree	Operation mode	Fuse* [A]
CPVF 2-8, CPVF 5-4	0,11/0,44	770/3420	17/33	Y/Y	0,55/1,0	0,59/0,78	200/100	IP 55	S3	6
CPVF 2-20, CPVF 5-8, CPVF 10-4	0,25/0,90	740/3360	17/33	Y/Y	0,95/2,0	0,65/0,82	200/100	IP 55	S3	10
CPVF 5-20, CPVF 10-8, CPVF 20-4	0,44/1,8	780/3380	17/33	Y/Y	1,60/3,3	0,64/0,89	200/100	IP 55	S3	16

***Attention:** Delayed-action fuse

5. FUNCTIONAL CHECK AFTER ASSEMBLY

Prior to initial operation of the hoist, grease the trolley pinions (manual, geared and electric trolleys) and lubricate the load chain when it is not under load (see page 9).
Before the hoist is put into regular service, following additional inspections must be made:

- Are all screwed connections on hoist and trolley tight and are all locking devices in place and secure?
- Are the end stops on the trolley runway in place and secure?
- Is the chain drive correctly reeved?
- The chain end stop must be correctly fitted to the loose end of the load chain (see Fig 1 - chain end stop).
- All units equipped with two or more chain strands should be inspected before initial operation for twisted or kinked chains. The chains of 2-strand hoists may e. g. be twisted if the bottom block is rolled over.
- Check the function of the limit switch by running the buffers of the chain end stop resp. bottom block against the limit switch underneath the housing. The lifting resp. lowering operation must be stopped immediately.
- Check the brake function when lifting and lowering.
- Traverse the trolley (if available) the complete length of the trolley runway ensuring that the 2 - 4 mm lateral clearance between the trolley wheel flange and the beam outer edge is maintained at all times. Check that beam end stops are positioned correctly and secure.

6. COMMISSIONING

Inspection before initial operation

Each hoist/trolley must be inspected prior to initial operation by a competent person and any failures be removed. The inspection is visual and functional. These inspections have to assure that the hoist is safe and has not been damaged by incorrect transport or storage. Inspections should be made by a representative of the manufacturer or the supplier although the company can assign its own suitably trained personnel. Inspections are instigated by the user.

Inspection by a crane expert

If the hoist is used as a crane with a capacity of at least 1000 kg, it has to be inspected and approved by a crane expert before initial operation. This inspection has to be registered in the crane inspection book. The inspection by the crane expert has to be instigated by the operating company.

7. OPERATION

Installation, service, operation

Operators delegated to install, service or independently operate the hoist must have had suitable training and be competent.
Operators are to be specifically nominated by the company and must be familiar with all relevant safety regulations of the country of use.

Inspection before starting work

Before starting work inspect the hoist/trolley, chains and all load bearing components every time for visual defects. Furthermore test the brake and make sure that the load and hoist/trolley are correctly attached by carrying out a short work cycle of lifting and lowering resp. travelling in both directions. Selection and calculation of the proper suspension point and beam construction are the responsibility of the operating company.

Inspection of load chain

Inspect the chain for sufficient lubrication and visually check for external defects, deformations, superficial cracks, wear or signs of corrosion.

Inspection of chain end stop

The chain end stop must be connected to the free (idle) chain strand (see Fig. 1 - chain end stop).

Inspection of chain reeving

All units with two or more chain strands should be inspected prior to initial operation for twisted or kinked chains. The chains of 2-strand hoists may be twisted if the bottom block was rolled over (Fig. 11).
The load chain has to be installed according to illustration (Fig. 14). Hereby the welds on the standing links must face away from the load sheave.

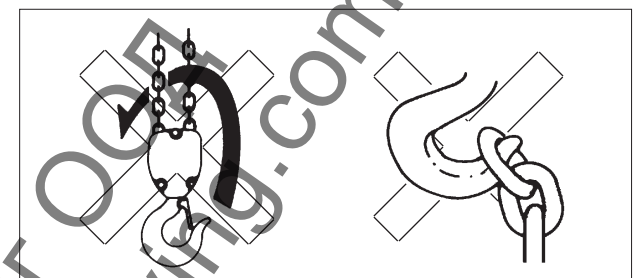

Fig. 11 Fig. 12

Inspecting the hooks

Check the load hook and the suspension hook for deformations, cracks, damages, abrasion and signs of corrosion.

Attaching the load

The load must always be seated in the saddle of the hook. Never attach the load to the tip of the load hook. This also applies to the suspension hook (Fig. 12).

Inspect the traverse (for trolleys)

Inspect the traverse for correct assembly and visually check for external defects, deformations, superficial cracks, wear or signs of corrosion. Especially make sure that the roll pins are properly fitted to the centre traverse (Fig. 10).

Check adjustment of trolley width

On chain hoists with trolley (CPV/F-VTP/G(E) check that the clearance between the trolley wheel flange and the beam outer edge is equal on both sides and within the tolerances given (see page 5, Fig. 10).
Enlarging the clearances, e. g. to enable the trolley to negotiate tighter curves, is forbidden.

Traversing the hoist

Plain trolley: Push the hoist or attached load.

Attention: Never pull on the pendant control cable. Suspended loads may only be pushed.

Geared trolley: By operating the trolley hand chain.

Electric trolley: By operating the ▸ resp. ◂ button. For trolleys with two speeds: The first stage of button depression activates the slow speed., further depression activates the fast speed. Use the slow speed for short periods only.

Attaching the load

Attach the load to the hoist using only approved and certified slings or lashing devices. Never use the load chain as sling chain. The load must always be seated in the saddle of the hook. Never attach the load to the tip of the hook. Do not remove the safety latch from the load hook.

Lifting/lowering the load

The load is lifted by depressing the ▲-button, it is lowered by depressing the ▼-button. For hoists with two speeds: The first stage of button depression activates the slow speed, further depression activates the faster speed. In order to raise the load, always use the lowest available lifting speed. The chain must be loaded at this speed and may not lie slack on the floor. The slow speed may only be used for short distances. The chain end stop may not be used as operational limit switch (see Fig. 1). Use the slow speed for short periods only. Do not use the chain end stop as operational limit device.

Emergency stop

All movement can be immediately halted by depressing the red, mushroom shaped button on the pendant control.

Attention: Operating the red emergency button does NOT automatically disconnect the mains supply to hoist or trolley. To release the emergency stop, rotate the button in an clockwise direction.

End limit switch

This hoist is provided with an end limit switch for the lowest and highest hook position as standard. This limit switch is a safety device and may not be used as operational limiting device.

8. SERVICE

- Service and inspections may only be carried out by a competent person.
- The inspection must determine that all safety devices are present and fully operational and covers the condition of the hoist, lifting gear, accessories and supporting constructions.
- The service intervals and inspections noted are for normal working conditions. Adverse working conditions, e. g. heat or chemical environments, can dictate shorter periods.
- The Yale electric chain hoist CPV/F conform to FEM group 1Am in accordance with FEM 9.511. This results in a theoretical service lifetime of 800 operating hours under full load.
  This is equivalent to 10 years under normal operating conditions. After this period the hoist requires a general overhaul. Further information is contained in BGV D6 resp. FEM 9.755.

Attention: Maintenance work requires subsequent function testing with nominal load.

8.1 DAILY CHECKS

1. Visually check the pendant control switch and cable for damage.
2. Function test of brake
3. Function test of end limit switch
4. Electric chain hoists with trolley:

- Check that the trolley runway is free from obstructions
- Check that the end stops on the trolley runway are fitted and secure.

Inspection and Maintenance	Initial checks			Periodical checks		
	during commis-sioning	after 50 operating hours	after 200 operating hours	daily	after 200 operating hours	annually
Lubricate load chain	•	•	•		•	
Pendant control and support wire	•	•		•		
Check oil level	•	•			•	
Function test of brake	•			•		
Function test of end limit switch	•			•		
Function test of overload device	•					•
Electrical installation and power supply	•					•
Check for wear in chain drive		•	•		•	
Inspect chain bolts for cracks		•				•
Inspect suspension bracket and load hook for cracks and deformation		•				•
Check screwed connections for tightness		•				•
Inspect trolley components for cracks and deformation		•				•
Oil change			•			•
Inspect motor and transmission of hoist						•
Inspect motor and transmission of trolley						•
Adjustment of overload device						•
Adjustment of brake						•
Lubricate geared trolley drive						•

8.2 REGULAR INSPECTIONS, SERVICE AND TESTING

According to prevailing national/international occupational safety and health regulations, hoisting equipment must be inspected at least annually by a competent person. Adverse working conditions may dictate shorter inspection periods.
The commissioning and inspection details can be noted on the test certificate delivered with the hoist or on page 9 of this manual.
Repairs may only be carried out by specialist workshops that use original Yale spare parts.
The inspection must determine that all safety devices are present and fully operational and cover the condition of the hoist, lifting gear, accessories and supporting constructions.
If required by the Occupational Health and Safety Organisation, the results of the adequate inspections and competent performance of repairs have to be substantiated. If the electric hoist (with capacity of 1 t and up) is installed in a carriage, or if the load is moved in one or several directions, the installation is considered as crane and inspections have to be carried out in accordance with BGV D6-Cranes.

Attention! Power supply must be disconnected while inspecting the device, unless the type of the examination excludes this.

8.3 LOAD CHAIN

The load chains are case-hardened and carry the designations 4 x 12,2 DAT, 5 x 15,1 DAT and 7,1 x 20,5 DAT.
The CPV/F electric hoists are specially designed to use this type of chain. For this reason only chains that have been approved by the manufacturer may be used in these hoists.

Lubricating the load chain

The load chain is to be lubricated before initial operation and every month, however, latest after 50 operating hours. Adverse working conditions, e. g. excessive dust or continued heavy duty can dictate shorter periods between lubrication.

- Before the chain is lubricated it must be cleaned. Flame cleaning is forbidden. Use only cleansing methods and agents that do not corrode the chain material. Avoid cleansing methods that can lead to hydrogen brittleness, e. g. spraying or dipping chain in caustic solvents. Also avoid surface treatments that can hide cracks and flaws or other surface damage.
- The chain must be lubricated in a no-load condition so that lubricant can enter between the links, e. g. by dipping in oil.
- Motor oil of the voscosity 100, e. g. Shell Tonna T68 can be used to lubricate the chain. For very dusty applications use a dry lubricant.

Inspecting the load chain for wear

Load chains must be inspected every 3 months or the latest after 200 operating hours.
Visually inspect the chain over its full length for deformation, cracks, flaws, elongation, wear or corrosive pitting.
Link chains must be replaced when the nominal thickness d on any part of the chain has been reduced by more than 10 % or when the pitch t is elongated by more than 5 % or over 11 pitches (11 x t) by 2 % (Fig. 13).
Nominal dimensions and wear limits are shown in the following table 2.
Chains that do not fulfil all requirements must be replaced immediately.

Link chains A = 4 x 12,2 DAT / B = 5 x 15,1 DAT / C = 7,1 x 20,5 DAT

Inspection	Dim.	Nominal value [mm]			Wear limit [mm]		
		A	B	C	A	B	C
Length over 11 pitches	11 x t	134,2	166,1	225,5	136,9	169,4	230,0
Length of 1 pitch	t	12,2	15,1	20,5	12,8	15,9	21,5
Diameter	d	4	5	7,1	–	–	–
Mean thickness	$\frac{d_1 + d_2}{2}$	4	5	7,1	3,6	4,5	6,4

Tab. 2

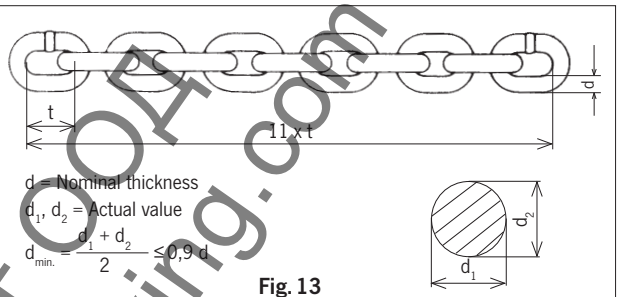

Fig. 13

Replace the load chain

1-strand design

1. Disassemble bottom block
Unscrew both cylinder screws and separate the housing halves.

2. Remove the chain end stop.
Remove the 2 screws. The chain is now free.

3. Fitting the new chain
Cut the second to last link open on the loose end of the load chain to form a C. Remove the last link and connect the new chain. The new chain must be fitted so that the welds on the standing links face towards the chain guide and away from the load sheave. Operate the hoist in the lowering direction (▼-button) to feed the chain through the hoist.

4. Fitting lower block and chain end stop
Slide the end buffers over the loose ends of the load chain and refit bottom block and chain end stop. The chain end stop must be fitted so that at least 1 link remains free (see Fig. 1).
Attention: Install new hex. nuts with clamping part.

5. Before initial operation lubricate the unloaded chain and test all hoist functions under no-load condition.

2-strand design

1. Remove the chain anchor bolt
The chain anchor bolt is situated on the underside of the hoist body. First unscrew the four cylinder screws of the chain anchor. Then tap out the anchor bolt with a drift.
Attention: Do not damage anchor bolt or bore.

2. Pull the load chain through the bottom block and remove the chain end stop.

3. Fitting the new chain
Cut the second to last link open on the loose end of the load chain to form a C. Remove the last link and connect the new chain. The new chain must be fitted so that the welds on the standing links face towards the chain guide in the housing. Operate the hoist in the lowering direction (▼-button) to feed the chain through the hoist.

4. Replace chain end stop
Slide the buffer pad over the loose end of the load chain and refit the chain end stop ensuring that at least 1 link remains free (see Fig. 1).

5. Fitting the chain anchor bolt
Inspect the chain anchor bolt (Fig. 14) for flaws, cracks or burrs. Enter the last link of the other load chain end into the slot in the underside of the chain anchor.
Attention: The chain must not be twisted.
Now enter the chain anchor bolt through the side bore.
Attention: Move the last chain link back and forth while entering the chain anchor bolt to ensure that the chain is not trapped or damaged by the anchor bolt.
Finally the chain anchor is screwed with the housing again.

Fastening torque for the locking screws:
M6 = 10 Nm / M8 = 25 Nm
Functional fixed after 60 minutes.
Curing time at room temperature 24 hours.

Attention: Screws should be used only one time.

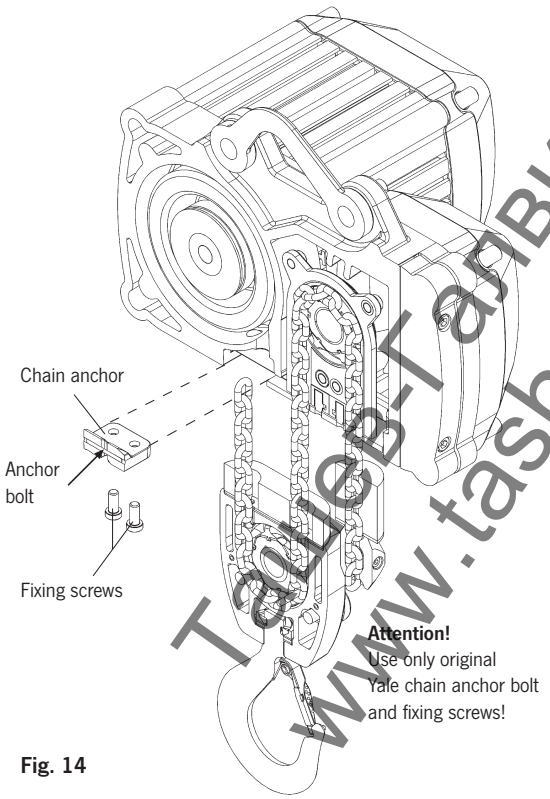

Fig. 14

6. Assemble the bottom block
Check the idler sheave for damage. Position the load chain over the idler sheave ensuring that the welds on the standing links are facing away. Now position the idler sheave bolt with roll pin in the housing half (the roll pin must correspond to the size of the groove). Then push the idler sheave onto the carrying bolt. The needle bearings should be greased beforehand. Prior to replacing and screwing the second housing half, make sure that the buffer pad is situated correctly in its groove.

7. Functional test
All units with two or more chain strands must be inspected before every operation for twisted or kinked chains. Chains on 2-strand units may become twisted if the bottom block is rolled over. If a strand is twisted disconnect it from the hoist and re-thread it correctly. In some cases it may be necessary to remove the last link.

8. Before initial operation lubricate the unloaded chain and test all hoist functions under a no-load condition.

8.4 MAINTENANCE LOAD HOOK

Inspect the hooks for deformation, damage, surface cracks, wear and signs of corrosion as required but at least annually. Adverse working conditions may dictate shorter periods. Hooks that do not fulfil all requirements must be replaced immediately. Welding on hooks to compensate for wear or damage is not permissible. Hooks must be replaced when the mouth of the hook has opened more than 10% (Fig. 15) or the nominal value of other dimensions has decreased by 5% due to wear. Nominal dimensions and wear limits are shown in the following table.

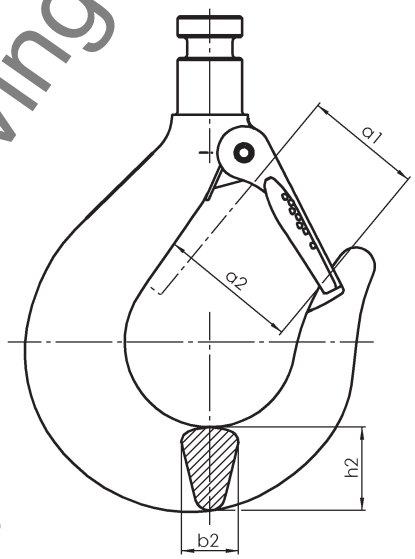

Fig. 15

Inspection	Dim.	CPV/F 2-8 / 2-20 5-4 / 5-8 / 5-20		CPV/F 10-4 / 10-8		CPV/F 20-4	
		nominal value [mm]	min. value [mm]	nominal value [mm]	min. value [mm]	nominal value [mm]	min. value [mm]
Hook saddle width	b_2	15,0	14,2	21,0	19,9	26,0	24,7
Hook saddle height	h_2	22,1	21,0	29,6	25,2	37,1	35,2
Hook opening	a_2	38,0	41,8	44,0	48,4	47,6	52,4
Hook opening with safety latch	a_1	29,0	31,9	35,8	39,4	40,0	44,0

Tab. 3

8.5 MAINTENANCE TROLLEYS

In particular check following parts:

- Side plate: For cracks or deformation in particular around the areas of screwed connections.
- Trolley wheels: Visually check for cracks and wear on trolley wheel flanges. Grease the transmission.
- Crossbars: In particular around threaded areas for cracks.
- Fasteners: Check nuts, screws and locking devices for tightness.

8.6 MAINTENANCE OF OVERLOAD PROTECTION DEVICE

Overload protection device

The unit is equipped with an overload protection device as standard. This device is factory set to 125% + 15% of the rated capacity and prevents reliably overloading of the hoist during lifting of loads. Adjustment and testing of the overload device may only be carried out by authorized competent persons.
The force-limit factor according EN 14492-2:2006 amounts $\phi_{DAL} = 1{,}35$.
The maximum force occuring when the rated capacity limiter operates will be calculated as:

$$F_{LIM} = (\phi_{DAL} \times m_{RC} + m_H - m_{RC}) \times g$$

$\phi_{DAL} = 1{,}35$

m_{RC} = Rated capacity of the hoist [kg]

m_H = Hoist load [kg]

Hoist load m_H: Load which includes all the masses of a load equal to the rated capacity of the hoist, the hoist medium and the fixed load lifting attachments, e. g. hooks, grabs, magnets, lifting beams, vacuum lifters.

g = Acceleration due to gravity (9,81) [m/s^2]

Adjustment of overload device (Fig. 16.1)

Attention: The adjustment of the overload device may only be done by authorized, competent personnel.

Attention: During this job the hoist remains operable which can result in danger of injury by rotating parts.

- Loosen the four socket screws (1) of the fan guard (2).
- Take off fan guard (2) and remove snap ring (3), fan (4) and key (5).
- Loosen the adjusting nut (6) with a pin type face wrench acc. to DIN 3116 in anti-clockwise direction until blocked.

Attention: The adjusting nut is secured with a screw securing agent (Loctite® 243). For loosening, it may be necessary to heat up the area of the adjusting nut to max. 80° C using a hot-air blower, for example. Any remainders of the screw securing agent must be completely removed.

Attention: Prior to new adjustment, always use Loctite® 243 again for securing the adjusting nut.

- Turn the adjusting nut in clockwise direction, until the test load is raised.

Attention: The max. operating time of the overload device is 60 seconds. Thereafter the unit has to cool down to room temperature (min. 20 minutes).

- Reassemble in opposite sequence.

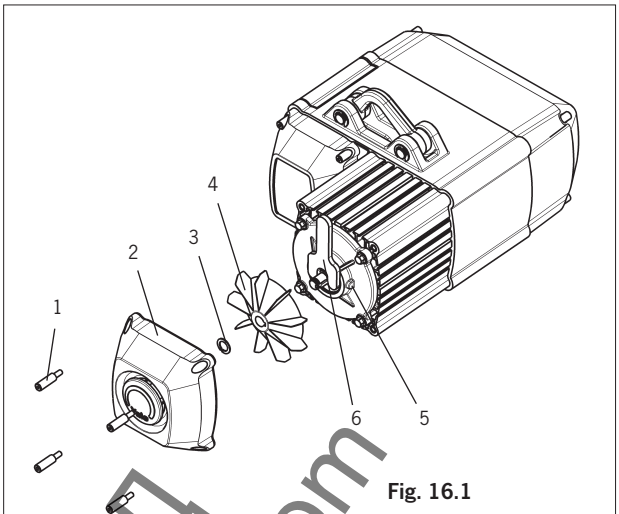

Fig. 16.1

8.7 MAINTENANCE OF GEARBOX

The gearbox is practically maintenance-free. Service is therefore reduced to changing the oil.

Oil change (Fig. 16.2)

The gearbox oil should be changed after every 10 years, however, latest after 800 operating hours (oil volume see table 4).

Attention: During oil change the electric power supply must be shut off.

Disassemble the gear cover (item 2) by removing the cylinder screws (item 1). Place the hoist horizontally and turn so that the oil can drain from the fill hole into a suitable container (approx. 30 minutes).
Replenish the gearbox oil. We recommend a mineral oil viscosity class ISO-VG 320, e. g. FINA GIRAN L 320. Finally re-adjust the device with new gasket (item 3).

Model	Oil volume
CPV/F 2-8, CPV/F 2-20, CPV/F 5-4, CPV/F 5-8, CPV/F 10-4	0,3 Litre
CPV/F 5-20, CPV/F 10-8, CPV/F 20-2, CPV/F 20-4	0,5 Litre

Tab. 4

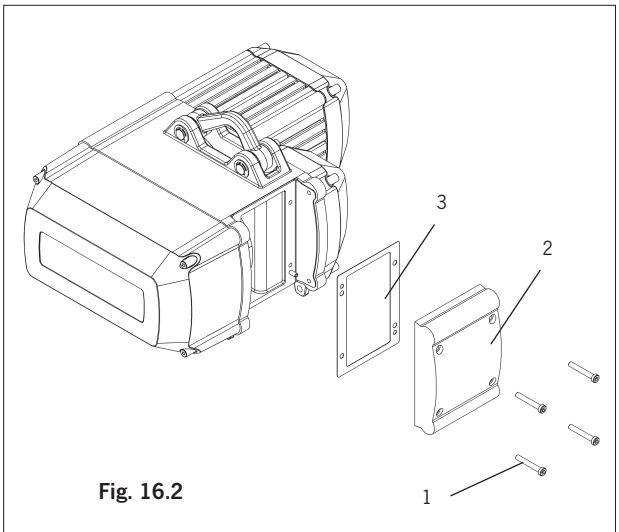

Fig. 16.2

8.8 MAINTENANCE OF MOTOR

Motor

Under normal conditions the motor is practically maintenance-free.

Spring activated disc brake

Service to the motor brake is reduced to checking and adjustment of the nominal brake air gap. The disc brake air gap should be between 0,15 and 0,6 mm. This guarantees short reaction time and low noise emission. When the wear of the brake lining comes down to the point, where the max possible air gap has finally been reached, the brake lining has to be replaced.

Attention: Do not allow the brake friction pads come into contact with lubricant or similar.

Following dimensions of the brake air gap have to be maintained:

Model	Air gap + 0,1 SLü [mm]		Motor brake
	nominal	max.	[Type]
CPV/F 2-8, CPV/F 5-4	0,15	0,3	BFK 457 - 05
CPV/F 2-20, CPV/F 5-8, CPV/F 10-4[1]	0,2	0,4	BFK 457 - 06
CPV/F 10-8, 20-4, 10-4[2], 20-2	0,2	0,6	BFK 457 - 08
CPV/F 5-20	0,2	0,7	BFK 457 - 10

[1]) 400 V / 3 Ph / 50 Hz, 2-strand design — [2]) 230 V / 1 Ph / 50 Hz, 1-strand design

Tab. 5

Attention: When checking the air gap, the motor must be switched off and the hoist must be unloaded.

- Measure air gap SLü between armature disc and magnet part with feeler gauge.
- Compare measured air gap value with max admissible air gap SLü (see table 5).
- If necessary replace rotor with brake lining.

Replacement of brake rotor with friction lining (Fig. 17):

- Loosen the three countersunk socket screws (item 3), lift-off flange (item 2) and replace rotor with friction lining (item 1).
- Reassemble in opposite sequence.
- Finally check the brake function with nominal load in lifting and lowering operation.

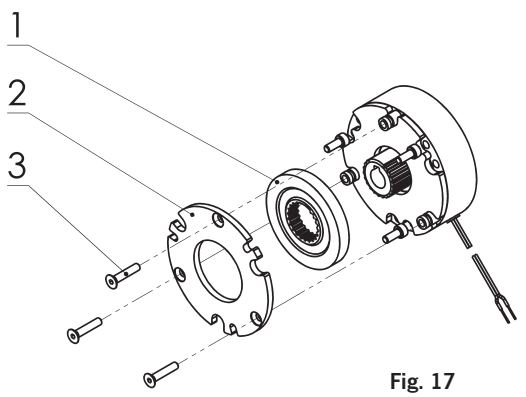

Fig. 17

Build-up of motor brake (Fig. 18):

Attention: The unit must be de-energised!

- Disassemble the control cover (item 2) by loosening the four cylinder screws (item 1).
- Remove the transformer or adapter plate for control (item 3) by unscrewing the screws.
- Loosen the four socket screws (item 4) of the brake and pull-off the brake (item 5) (Disconnect the control cable from the circuit board if necessary).
- After replacement of the motor brake, make sure that the function is tested with nominal load.

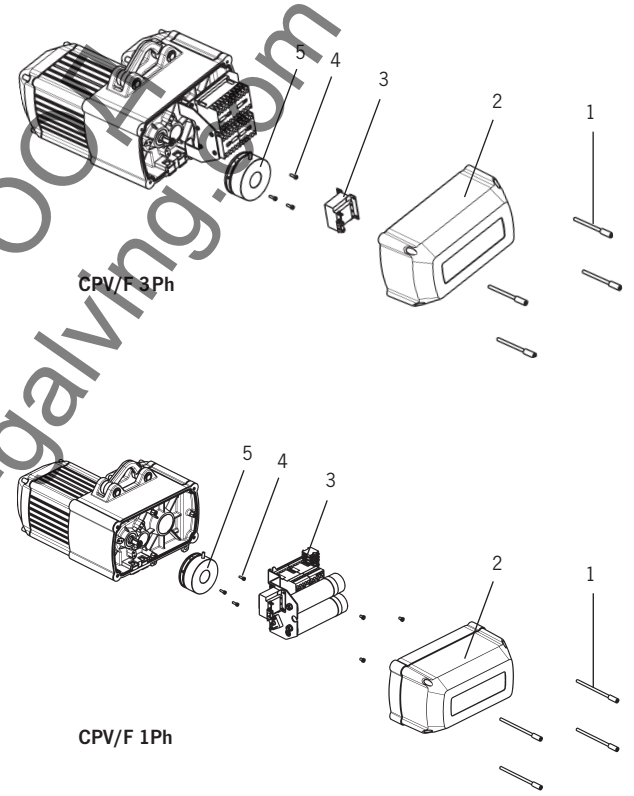

Fig. 18

8.9 ELECTRIC CHAIN HOIST IN GENERAL

In particular check following parts:

- Threaded connections in general
  Check all nuts, screws and locking devices for tightness.
- Chain container
  Ensure the chain container is securely fastened. Check for cracks or wear.
- Suspension bolt
  (Connection between hoist and suspension bracket resp. trolley)
  Check for cracks or wear. Ensure all safety devices are in place and secure.

Inspection Chart

Inspection before initial operation: _____

by: _____

Date of initial operation: _____

Regular Inspections

Date	Findings	Repair	Test	
			Date	by*

*competent person

Translation of the original

EC DECLARATION OF CONFORMITY
in accordance with Machinery Directive 2006/42/EC (Appendix II A)

We,

COLUMBUS McKINNON Industrial Products GmbH
D-42329 Wuppertal, Yale-Allee 30

hereby declare, that the design, construction and commercialized execution of the below mentioned machine complies with the essential health and safety requirements of the EC Machinery Directive. The validity of this declaration will cease in case of any modification or supplement not being agreed with us previously.
Furthermore, validity of this declaration will cease in case that the machine will not be operated correctly and in accordance with the operating instructions and/or not be inspected regularly.

Machine description:	Electric chain hoist CPV/F Mod. CPV/F 2-8, Mod. CPV/F 2-20, Mod. CPV/F 5-4, Mod. CPV/F 5-8, CPV/F 5-20, Mod. CPV/F 10-4, Mod. CPV/F 10-8, Mod. CPV/F 20-2, Mod. CPV/F 20-4 Capacity 250 - 2.000 kg
Machine type:	Electric chain hoist
Serial number:	Serial numbers for the individual units are recorded
Relevant EC Directives:	EC Machinery Directive 2006/42/EC Directive for electrical equipment 2006/95/EC ROHS directive 2002/95/EC WEEE directive 2002/96/EC EMC directive 2004/108/EC
Transposed harmonised standards in particular:	ISO 12100:2010 EN 349:1993 + A1: 2008 EN 818-1:1996 + A1: 2008 EN 818-7:2002 + A1: 2008 EN 14492-2:2008 EN 60204-32:1999 EN 61000-6-2:2005
Transposed (either complete or in extracts) national standards and technical specifications in particular:	DIN 15018-1:1984, DIN 15400:1990, DIN 15404-1:1989 BGV D6, BGV D8
Quality assurance:	EN ISO 9001:2008
Authorised representative for technical data:	COLUMBUS McKINNON Industrial Products GmbH Yale-Allee 30 - D-42329 Wuppertal, Germany

Original EG-Konformitätserklärung
gemäß EG-Richtlinie Maschinen 2006/42/EG (Anhang II A)

Hiermit erklären wir,

COLUMBUS McKINNON Industrial Products GmbH
D-42329 Wuppertal, Yale-Allee 30

dass die nachstehend bezeichnete Maschine in ihrer Konzipierung und Bauart sowie in der von uns in Verkehr gebrachten Ausführung den einschlägigen grundlegenden Sicherheits- und Gesundheitsanforderungen der EG-Richtlinie Maschinen entspricht. Bei einer nicht mit uns abgestimmten Änderung/Ergänzung der Maschine verliert diese EG-Konformitätserklärung ihre Gültigkeit. Weiterhin verliert diese EG-Konformitätserklärung ihre Gültigkeit, wenn die Maschine nicht entsprechend den in der Betriebsanleitung aufgezeigten bestimmungsgemäßen Einsatzfällen eingesetzt und die regelmäßig durchzuführenden Überprüfungen nicht ausgeführt werden.

Bezeichnung der Maschine:	Elektrokettenzug CPV/F Mod. CPV/F 2-8, Mod. CPV/F 2-20, Mod. CPV/F 5-4, Mod. CPV/F 5-8, CPV/F 5-20, Mod. CPV/F 10-4, Mod. CPV/F 10-8, Mod. CPV/F 20-2, Mod. CPV/F 20-4 Tragfähigkeit 250 - 2.000kg
Maschinentyp:	Elektrokettenzug
Seriennummer:	Seriennummern für die einzelnen Geräte werden archiviert
Einschlägige EG-Richtlinien:	EG-Richtlinie Maschinen 2006/42/EG Niederspannungsrichtlinie 2006/95/EG ROHS-Richtlinie 2002/95/EG WEEE-Richtlinie 2002/96/EG EMV-Richtlinie 2004/108/EG
Angewandte harmonisierte Normen insbesondere:	ISO 12100:2010 EN 349:1993 + A1: 2008 EN 818-1:1996 + A1: 2008 EN 818-7:2002 + A1: 2008 EN 14492-2:2008 EN 60204-32:1999 EN 61000-6-2:2005
Vollständig bzw. auszugsweise angewendete nationale Normen und technische Spezifikationen insbesondere:	DIN 15018-1:1984, DIN 15400:1990, DIN 15404-1:1989 BGV D6, BGV D8
Qualitätssicherung:	EN ISO 9001:2008
Dokumentationsbevollmächtigter:	COLUMBUS McKINNON Industrial Products GmbH Yale-Allee 30 - D-42329 Wuppertal, Germany
Datum/Hersteller-Unterschrift:	28.04.2014
Angaben zum Unterzeichner:	Dipl.-Ing. Andreas Oelmann Leiter Qualitätssicherung

Germany
COLUMBUS McKINNON
Industrial Products GmbH*
Yale-Allee 30
42329 Wuppertal
Phone: 00 49 (0) 202/693 59-0
Web Site: www.cmco.eu
Web Site: www.yale.de
E-mail: info.wuppertal@cmco.eu

COLUMBUS McKINNON
Engineered Products GmbH*
Am Silberpark 2-8
86438 Kissing
Phone: 00 49 (0) 8233 2121-800
Web Site: www.cmco.eu
Web Site: www.pfaff-silberblau.com
E-Mail: info.kissing@cmco.eu

France
COLUMBUS McKINNON France SARL*
Zone Industrielle des Forges
18108 Vierzon Cedex
Phone: 00 33 (0) 248/71 85 70
Fax: 00 33 (0) 248/75 30 55
Web Site: www.cmco-france.com
E-mail: sales.fr@cmco.eu

United Kingdom
COLUMBUS McKINNON Corporation Ltd.
Knutsford Way, Sealand Industrial Estate
Chester CH1 4NZ
Phone: 00 44 (0) 1244 375375
Fax: 00 44 (0) 1244 377403
Web Site: www.cmco.eu
E-mail: sales.uk@cmco.eu

Italy
COLUMBUS McKINNON Italia S.r.l.
Via P. Picasso, 32
20025 Legnano (MI)
Phone: 00 39 (0) 331/57 63 29
Fax: 00 39 (0) 331/46 82 62
Web Site: www.cmco.eu
E-mail: sales.it@cmco.eu

Netherlands
COLUMBUS McKINNON Benelux B.V.*
Grotenoord 30
3341 LT Hendrik Ido Ambacht
Phone: 00 31 (0) 78/6 82 59 67
Fax: 00 31 (0) 78/6 82 59 74
Web Site: www.cmco.eu
E-mail: sales.nl@cmco.eu

Northern Ireland & Republic of Ireland
COLUMBUS McKINNON Corporation Ltd.
1A Ferguson Centre
57-59 Manse Road
Newtownabbey BT36 6RW
Northern Ireland
Phone: 00 44 (0) 2890 840697
Fax: 00 44 (0) 2890 343673
Web Site: www.cmco.eu
E-mail: sales.ni@cmco.eu

Austria
COLUMBUS McKINNON Austria GmbH*
Gewerbepark, Wiener Straße 132a
2511 Pfaffstätten
Phone: 00 43 (0) 22 52/4 60 66-0
Fax: 00 43 (0) 22 52/4 60 66-22
Web Site: www.cmco.at
E-mail: zentrale@cmco.at

Poland
COLUMBUS McKINNON Polska Sp. z o.o.
ul. Owsiana 14
62-064 PLEWISKA
Phone: 00 48 (0) 61 6 56 66 22
Fax: 00 48 (0) 61 6 56 66 88
Web Site: www.pfaff.info.pl
E-Mail: kontakt@pfaff-silberblau.pl

Russia
COLUMBUS McKINNON Russia LLC
ul. Marshala Govorova 35/2
198095 St. Petersburg
Phone: 007 (812) 322 68 38
Fax: 007 (812) 322 68 38
Web Site: www.cmco.ru
E-mail: info@cmco.ru

Switzerland
COLUMBUS McKINNON Switzerland AG
Dällikerstraße 25
8107 Buchs ZH
Phone: 00 41 (0) 44 8 51 55 77
Fax: 00 41 (0) 44 8 51 55 88
Web Site: www.cmco.ch
E-mail: info.buchs@cmco.eu

Spain & Portugal
COLUMBUS McKINNON Ibérica S.L.U.
Ctra. de la Esclusa, 21 acc. A
41011 Sevilla
Phone: 00 34 954 29 89 40
Fax: 00 34 954 29 89 42
Web Site: www.yalejberica.com
E-mail: informacion@cmco.eu

South Africa
CMCO Material Handling (Pty) Ltd.*
P.O. Box 15557
Westmead, 3608
Phone: 00 27 (0) 31/700 43 88
Fax: 00 27 (0) 31/700 45 12
Web Site: www.yale.co.za
E-mail: sales@cmcosa.co.za

Yale Engineering Products (Pty) Ltd.
12 Laser Park Square, 34 Zeiss Rd.
Laser Park Industrial Area, Honeydew
Phone: 00 27 (0) 11/794 29 10
Fax: 00 27 (0) 11/794 35 60
Web Site: www.yalejhb.co.za
E-mail: info@yalejhb.co.za

Yale Lifting Solutions (Pty) Ltd.
P.O. Box 592
Magaliesburg, 1791
Phone: 00 27 (0) 14/577 26 07
Fax: 00 27 (0) 14/577 35 34
Web Site: www.yale.co.za
E-mail: sales@yalelift.co.za

Turkey
COLUMBUS McKINNON
Kaldırma Ekip. San. ve Tic. Ltd. Şti.
Davutpaşa Caddesi Emintaş
Davutpaşa Matbaacılar Sitesi No. 103/233-234
34010, Topkapı-İstanbul
Phone: 00 90 (212) 210 7 555
Fax: 00 90 (212) 220 7 505
Web Site: www.cmco.eu
E-mail: info.turkey@cmco.eu

Hungary
COLUMBUS McKINNON Hungary Kft.
Vásárhelyi út 5. VI ép
8000 Székesfehérvár
Phone: 00 36 22 880 540
Fax: 00 36 22 880 503
Web Site: www.cmco.eu
E-mail: info@cmco-hungary.com

United Arab Emirates
COLUMBUS McKINNON
Industrial Products ME FZE
Warehouse No. FZSBD01
P.O. Box 261013
Jebel Ali Free Zone, Dubai, U.A.E.
Phone: 00 971 4 8807772
Fax: 00 971 4 8807773
Web Site: www.cmco.eu
E-mail: sales.uae@cmco.eu

*Diese Niederlassungen gehören der Matrix-Zertifizierung nach EN ISO 9001:ff an.
*These subsidiaries belong to the matrix-certification-system according to EN ISO 9001:ff.